Shantilal Shah Engineering College, Bhavnagar

Applied Mechanics Department

(2180610) Design of Steel Structures

B.E. 8th Civil Tutorial-1: March-2019

Q.1. Design industrial building with detail drawing of following data:

Plan Area	=	18.0 m x42.0 m
Roof truss Span	=	18.0 m
Height of Column	=	9.0 m
Type of Roofing	=	G.I. Sheeting
Location of Shed	=	Bhavnagar
Roof Slope	=	1 in 4
Truss Configuration	=	As shown in Fig.-1
Spacing of Truss	=	6.0m c/c
For Steel Structure	=	Assume E250(Fe 410 W)C
For RCC structure	=	Assume Fe415 Grade steel and M25 Grade concrete
For Foundation	=	Allowable Bearing pressure on soil 180kN/m^2 at 2.5m below ground level. Unit weigh of soil back fill is 16kN/m^3.

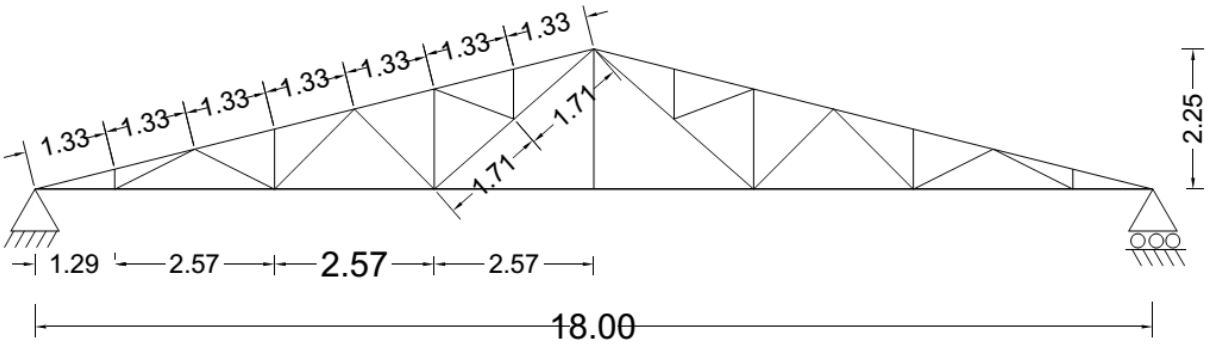

Fig.-1

********** End of Tutorial **********

Shantilal Shah Engineering College-Bhavnagar
B.E. 8th Civil –March-2019
Subject: Design of Steel (2180610)
Tutorial: 2: Gantry Girder

Use steel of grade Fe 410 if not specified in the problems.

Q.1 A shed is to be provided with a hand operated 50kN crane facility. The details of the building and the crane are :

- Longitudinal spacing of column 4.0m
- c/c distance of gantry girders 12m
- Wheel spacing 3.0m
- Edge distance 1.0m
- Weight of crane girder 40kN
- Weight of trolley car 10kN

Assume gantry girder is laterally supported.

Q.2 Design gantry girder of Q.1, but laterally unsupported. Compare the result of Q.1 and Q.2.

Q.3 Design a simply supported gantry girder to carry an electric overhead travelling crane for the following data:

- Crane capacity 320 kN
- Weight of crane and crab 300 kN
- Weight of crane 200 kN
- Minimum approach of crane hook 1.2 m
- Distance between c/c of wheels 3.2 m
- Distance between c/c of gantries 16.0 m
- Span of gantry girder 4.0 m
- Weight of rails 300 N/m Height of rails 75 mm

Assume one crane in gantry girder. Assume gantry girder is laterally supported.

Q.4 Design gantry girder of Q.3 , but laterally unsupported. Compare the result of Q.3 and Q.4.

Q.5 Design gantry girder in an industrial building for two moving cranes for the following data:

Assume gantry girders with two cranes and laterally supported.

- Crane capacity 200 kN (each)
- Weight of each crane 150 kN
- Weight of each crab 10 kN
- Minimum distance of crane hook 1.1 m
- Minimum distance between cranes 2 m
- Wheel base 3.4 m
- Bay width 16 m
- Spacing of columns 7 m

Assume gantry girders with two cranes and laterally supported.

*****

Shantilal Shah Engineering College-Bhavnagar
B.E. 8th Civil –March-2019
Subject: Design of Steel (2180610)
Tutorial: 3: Plate Girder

Note: Use steel of grade Fe 410 if not specified in the problems. Also assume the girder to be laterally supported throughout if not specified.

Q.1 Flexural Strength of Plate Girders. Determine the flexural design strength of the following welded shapes: the girders are simply supported and have continuous lateral support. Consider that only flanges resist bending moment. (a) Flanges: 230 × 12 mm, web; 1100 × 8 mm, span: 12 m (b) Flanges: 650 × 50 mm, web: 2000 × 12 mm, span: 16m

(Ans. 763.63 kNm; 15,142 kNm)

Q.2 Determine the flexural design strength of the following welded shape. The plate girder is simply supported and has lateral support at the ends and mid span only. Consider that only flanges resist bending moment. Flanges: 300 × 20 mm, Web: 1500 × 10 mm, Span: 15 m.

(Ans. 2418.47 kNm)

Q.3 For the girder Q.1 (a), determine the design shear strength if no intermediate stiffener is used.

(Ans. 450 kN)

Q.4 For the girder of Q.1 (a):

(a) Compute the design shear strength of end panel if the first intermediate stiffener is placed at 1700 mm from the support.

(b) Compute the design strength of an interior panel with a stiffener spacing of 3000 mm.

(Ans. 591 kN; 496.14 kN)

Q.5 Design a plate girder spanning 14.0 m and loaded as shown in the Fig. 3. the self-weight of the plate girder may be assumed to be 60 kN distributed uniformly over the entire span. Use steel of grade Fe 410.

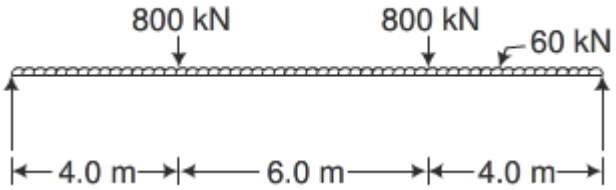

Fig.-3

*****

Shantilal Shah Engineering College-Bhavnagar

B.E. 8th Civil –March-2019

Subject: Design of Steel (2180610)

Tutorial: 4: Plastic Design:

Q.1 Find out the value of plastic modulus for the following sections:

(a) A square of side x, bent about a diagonal

(Ans. $Z_p = x^3/3\sqrt{2}$)

(b) An isosceles triangle of height h and base b, bent about an axis parallel to the base.

(Ans. $Z_p = bh^2(\sqrt{2}-1)/3\sqrt{2}$)

(c) An I-Section of overall depth 300 mm and flanges 200 × 20 mm, web 10 mm thick, bent about its strong axis.)

(Ans. $Z_{pz} = 1289 \times 10^3$ mm^3)

(d) A thin walled circular tube, mean diameter d, wall thickness t.

[Ans. $t.d^2$]

Q.2 Determine the collapse load for the continuous beam section shown in Fig. 1 The beam has a non-uniform cross section.

[Ans. $\frac{10}{3} \times \frac{M_p}{L}$]

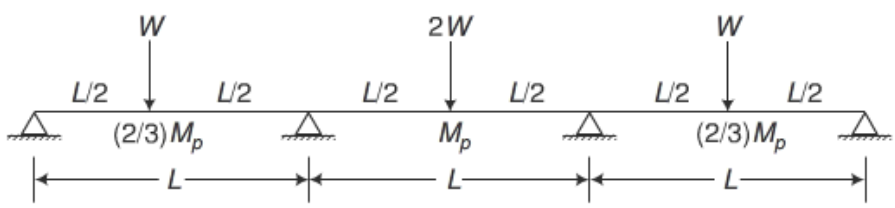

Fig.-1

Q.3 Find out the collapse load for a portal frame of uniform cross section as shown in Fig. 2.

(Ans. $W_u = 6M_p/L$)

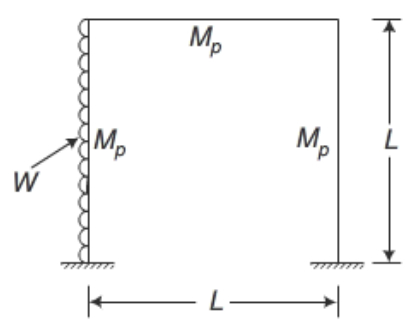

Fig.-2

*****